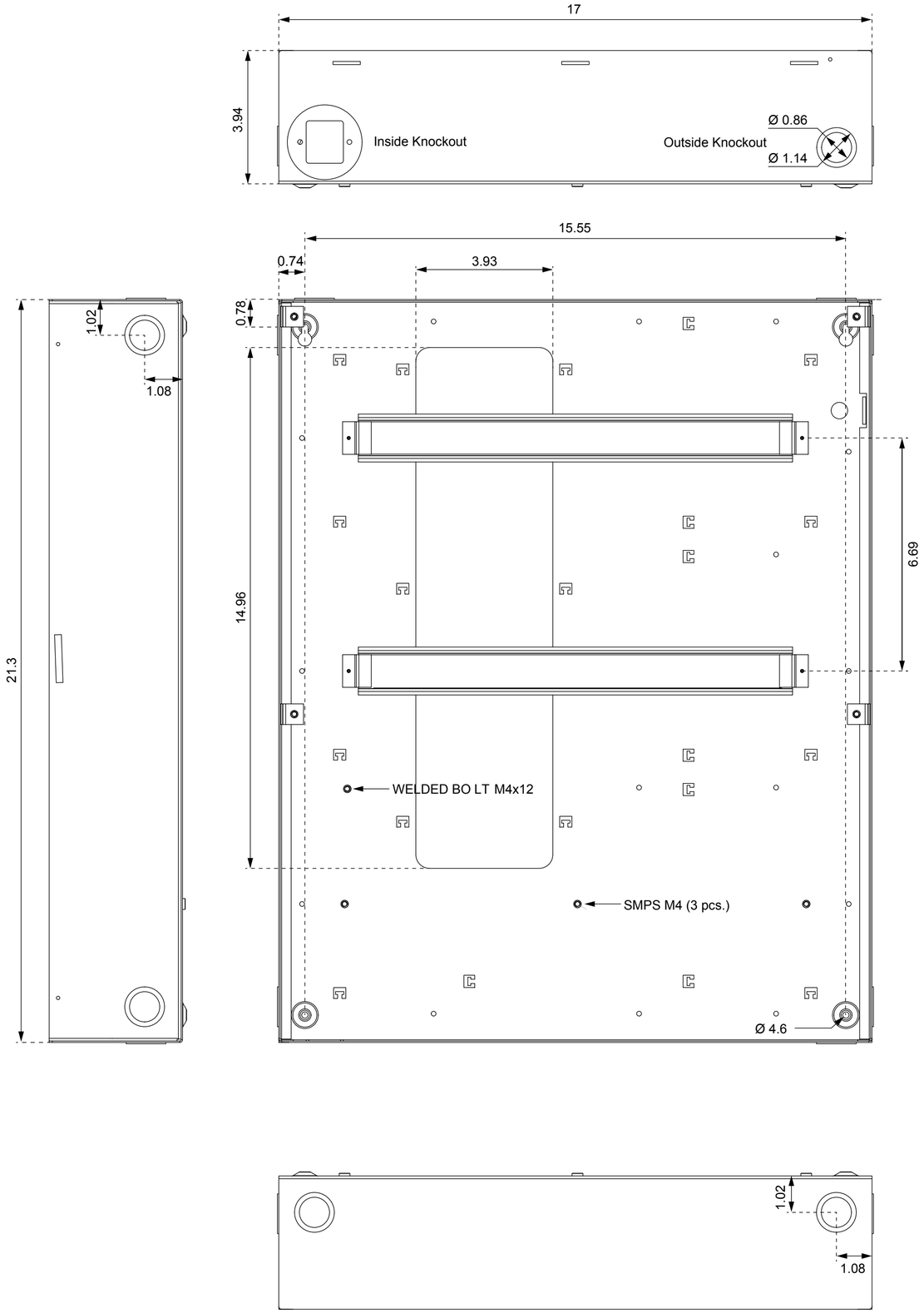

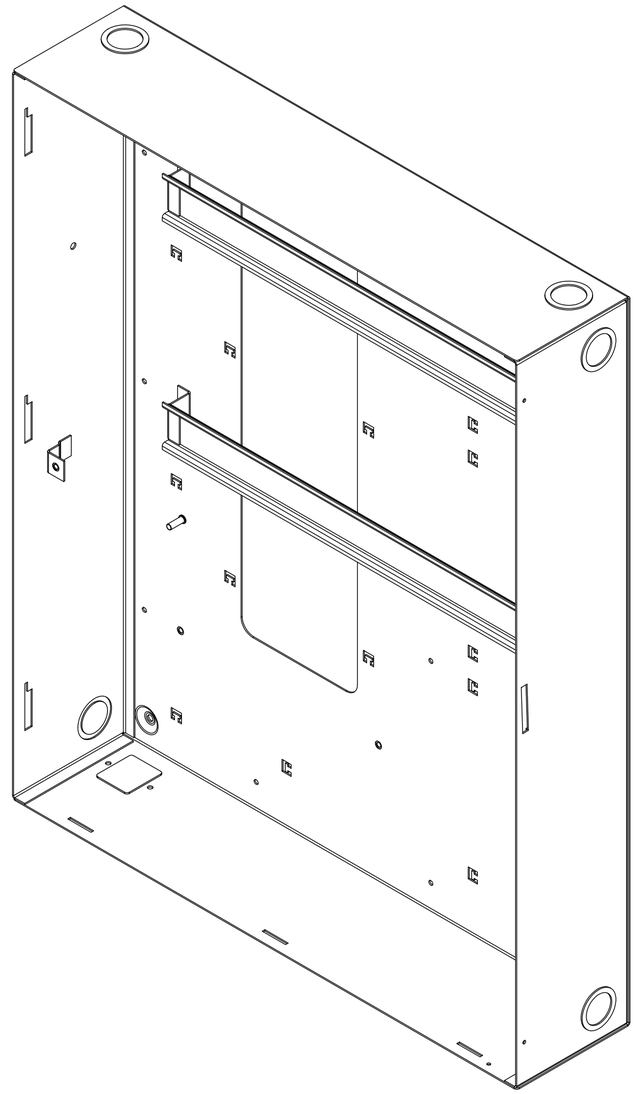

Scale: 1:2	Color: Black
ICT Integrated Control Technology www.ict.co	Material: sheet steel #1,0
	ICT DIN Rail Enclosure 2 x 3

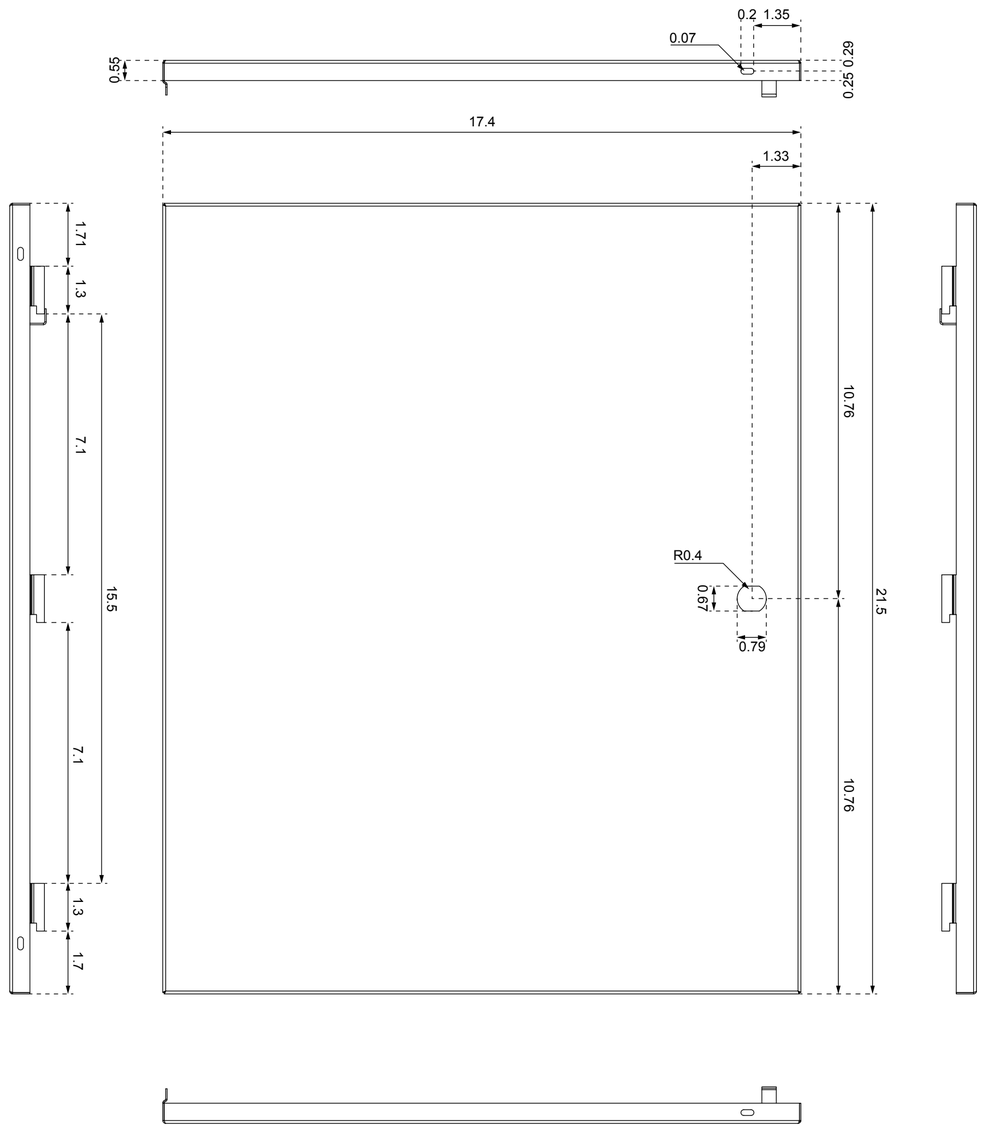

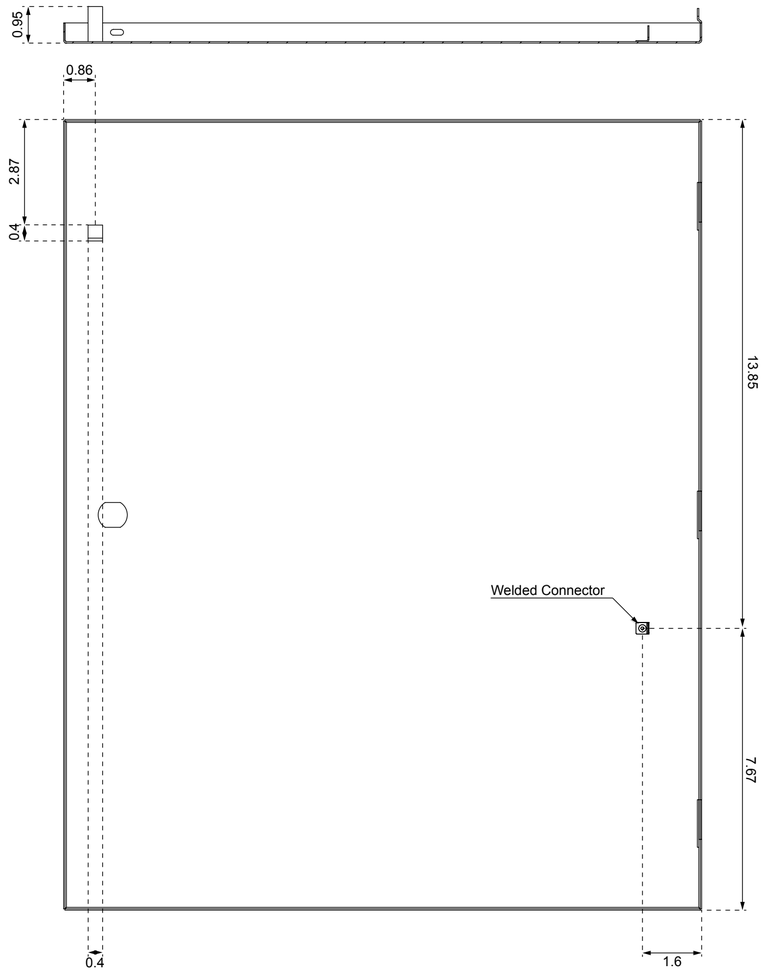

Scale: 1:2	Color: Black
ICT Integrated Control Technology www.ict.co	Material: sheet steel #1,0
	ICT DIN Rail Enclosure 2 x 3